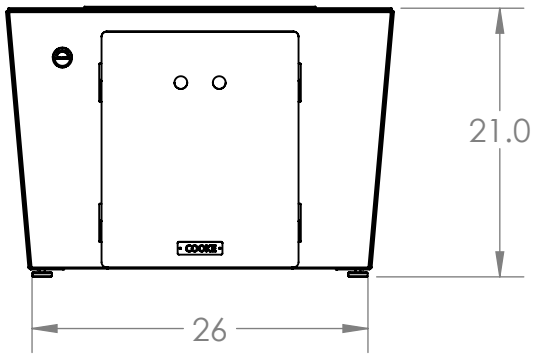

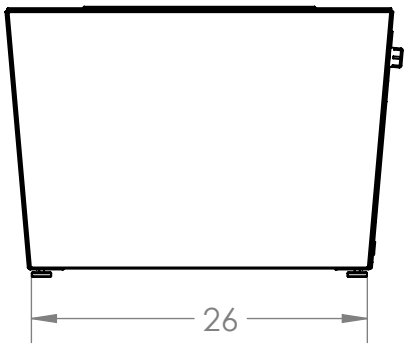

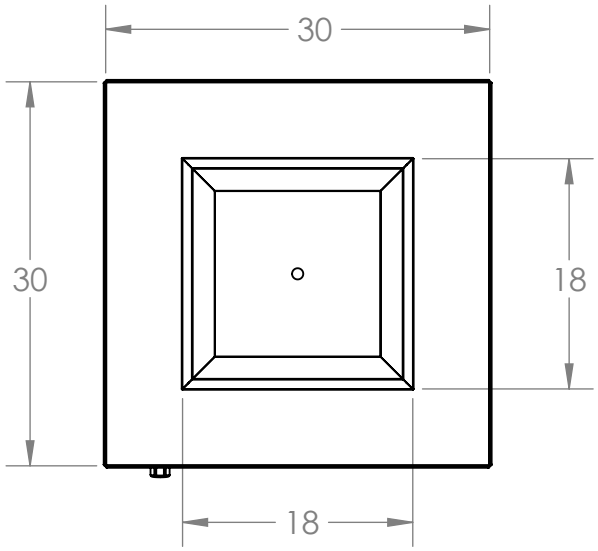

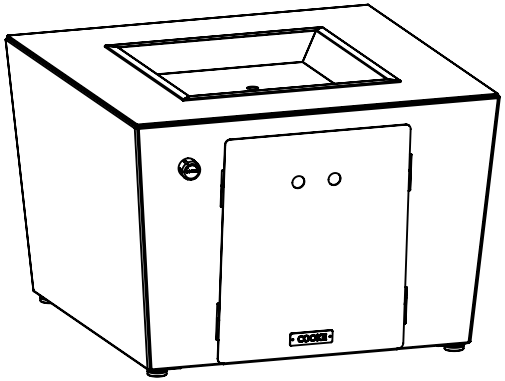

The Miami fire pit has sleek styling and is perfect for adding a fire in small spaces.

- Top Material

Granite or Aluminum Plate
Brushed or Powder coated in several standard colors
Custom options are available

- Base

14 GA Aluminum
Powder coated in several standard colors or custom colors are available

- Fire pit

304 SS pan, lid and burner
Optional glass wind screen
Media: Broken Glass, Lava rock
Custom options include
Ceramic stones, logs , etc.

- Fuel 60,000 BTU

Propane or Natural gas

- Ignition: Match lit, optional key valve, Full Electronic Ignition available requires 120v switched power

UNLESS OTHERWISE SPECIFIED:	**PROPRIETARY AND CONFIDENTIAL**	COOKE CONTEMPORARY FURNITURE info@cookefurniture.com 888-303-2453
DIMENSIONS ARE IN INCHES TOLERANCES: FRACTIONAL ± 1/32 ANGULAR: MACH ± .5° BEND ±1° TWO PLACE DECIMAL ± .05 THREE PLACE DECIMAL ±.010	THE INFORMATION CONTAINED IN THIS DRAWING IS THE SOLE PROPERTY OF **DCI LLC**. ANY REPRODUCTION IN PART OR AS A WHOLEWITHOUT THE WRITTEN PERMISSION OF **DCI LLC** ISPROHIBITED.	TITLE: MIAMI Square Fire Pit
INTERPRET GEOMETRIC TOLERANCING PER: ANSI	COMMENTS:	
MATERIAL 5052		SIZE A / DWG. NO. MIAMI-ASM / REV A
FINISH TBD		
DO NOT SCALE DRAWING		SCALE: 1:24 / WEIGHT: / SHEET 1 OF 1

5 4 3 2 1