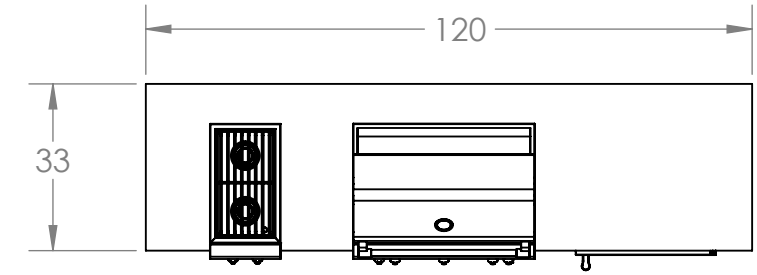

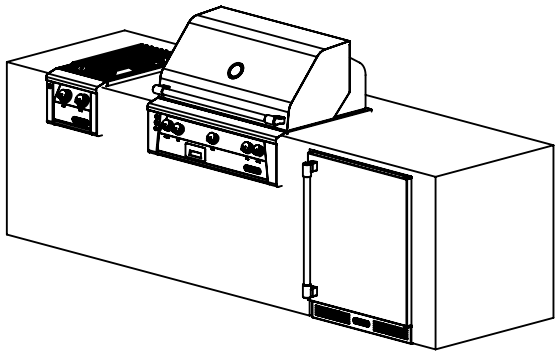

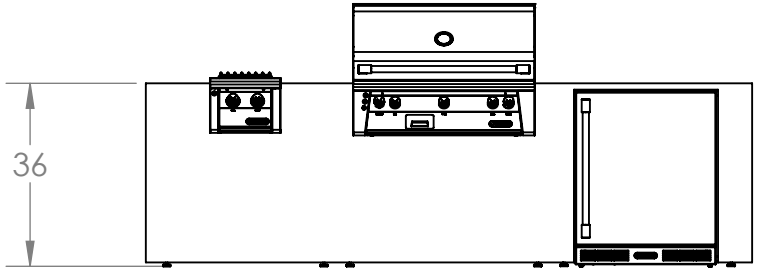

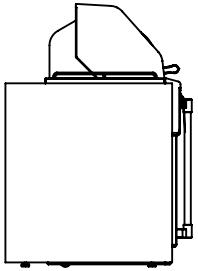

UNLESS OTHERWISE SPECIFIED: DIMENSIONS ARE IN INCHES TOLERANCES: FRACTIONAL ± 1/32 ANGULAR: MACH ± .5° BEND ±1° TWO PLACE DECIMAL ± .05 THREE PLACE DECIMAL ±.010	**PROPRIETARY AND CONFIDENTIAL** THE INFORMATION CONTAINED IN THIS DRAWING IS THE SOLE PROPERTY OF **DCI LLC**. ANY REPRODUCTION IN PART OR AS A WHOLEWITHOUT THE WRITTEN PERMISSION OF **DCI LLC** ISPROHIBITED.	COOKE CONTEMPORARY FURNITURE info@cookefurniture.com 888-303-2453 TITLE: Demillo Island
INTERPRET GEOMETRIC TOLERANCING PER: ANSI	COMMENTS:	
MATERIAL		SIZE A / DWG. NO. RDISLD-ASM / REV C
FINISH		
DO NOT SCALE DRAWING		SCALE: 1:32 / WEIGHT: / SHEET 1 OF 1

5 4 3 2 1