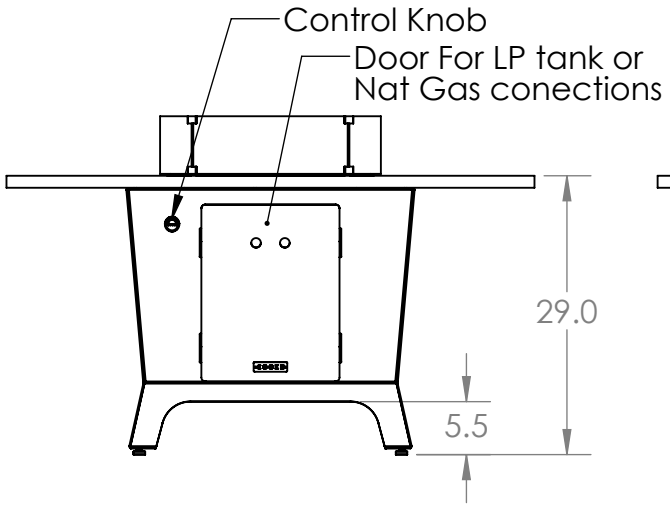

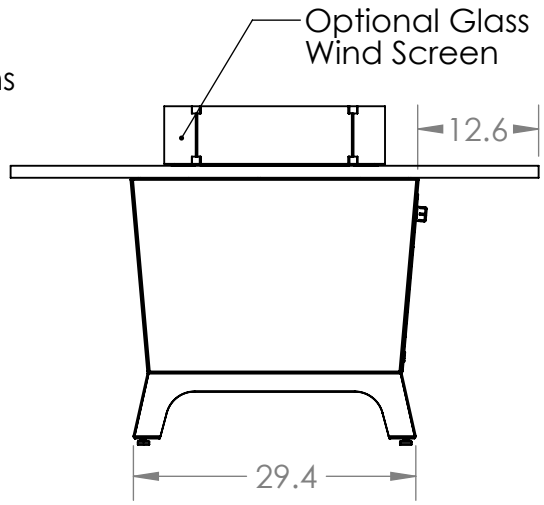

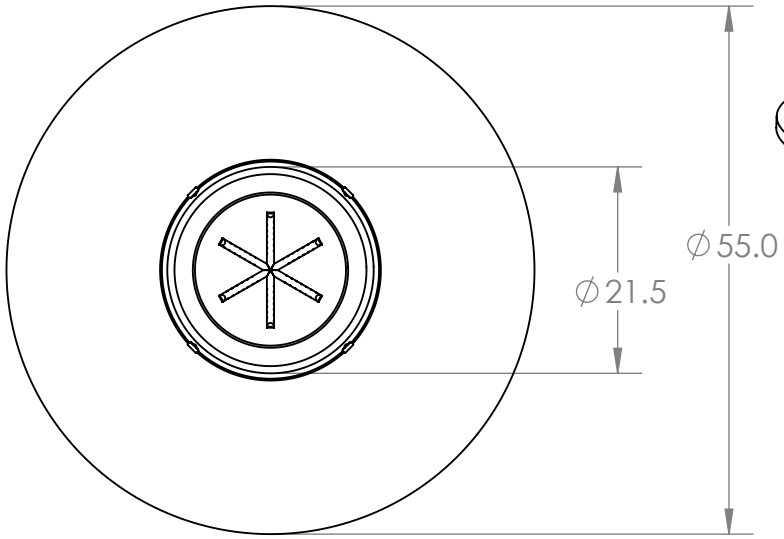

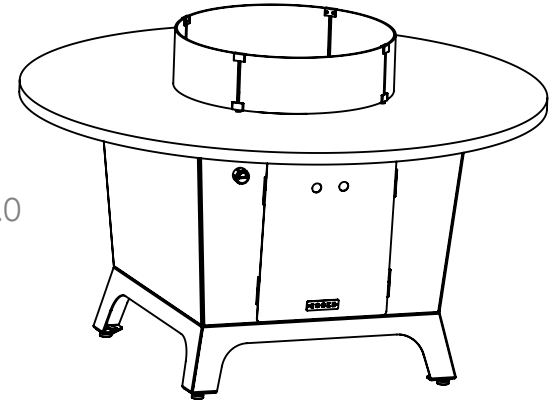

The Olympic round fire pit table with a 55DIA top makes a perfect formal dining with plenty of room for glasses and plates. The ample toe room make for comfortable foot placement.

- Top Material
Natural Stone
Granite Tier 1,2,3
Custom options are available

- Base
14 GA Aluminum
Powder coated in several standard colors or custom colors are available

- Fire pit
304 SS pan, lid and burner
Optional glass wind screen
Media: Broken Glass, Lava rock
Custom options include Ceramic stones, logs , etc.

- Fuel 60,000 BTU
Propane or Natural gas

- Ignition: Match lit, Full Electronic Ignition available requires 120v switched power

UNLESS OTHERWISE SPECIFIED: DIMENSIONS ARE IN INCHES TOLERANCES: FRACTIONAL ± 1/32 ANGULAR: MACH ± .5° BEND ±1° TWO PLACE DECIMAL ± .05 THREE PLACE DECIMAL ±.010	**PROPRIETARY AND CONFIDENTIAL** THE INFORMATION CONTAINED IN THIS DRAWING IS THE SOLE PROPERTY OF **DCI LLC**. ANY REPRODUCTION IN PART OR AS A WHOLEWITHOUT THE WRITTEN PERMISSION OF **DCI LLC** ISPROHIBITED.	COOKE CONTEMPORARY FURNITURE info@cookefurniture.com 888-303-2453 TITLE: Olympic Round Fire Pit Table 55DIAx30
INTERPRET GEOMETRIC TOLERANCING PER: ANSI	COMMENTS:	
MATERIAL Aluminum		SIZE A · DWG. NO. Olympic-55DIAx30 · REV A
FINISH TBD		
DO NOT SCALE DRAWING		SCALE: 1:24 · WEIGHT: · SHEET 1 OF 1

5 4 3 2 1