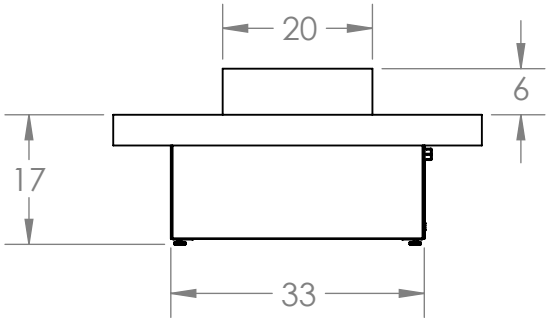

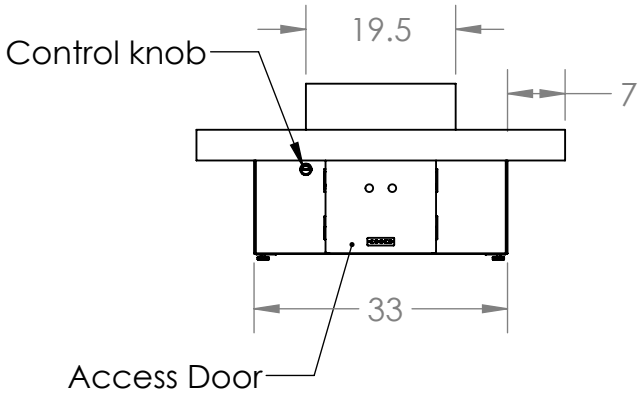

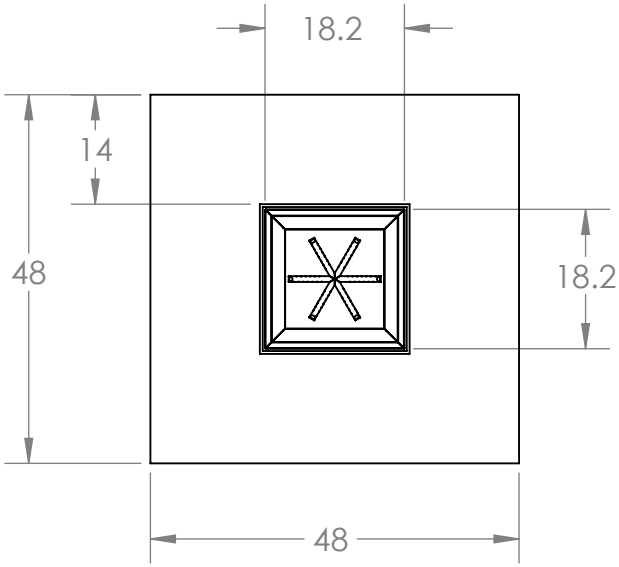

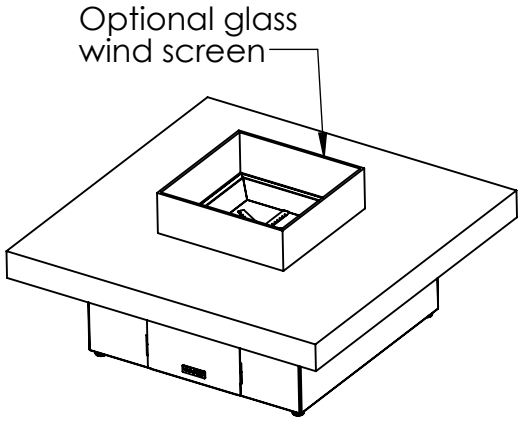

The Montecito fire pit table is very customizable allowing you to order it in any size and finish you need.

- Top Material
Granite Tier 1,2,3, Stainless steel or Custom selection

- Base Options
Copper plating with option of forced patina
Brushed or polished 304 stainless steel
Powder coating in several standard colors or custom colors are available

- Fire pit media
Broken Glass, Lava rock
Custom options include Ceramic stones, logs , etc.

- Fuel 60, 000 BTU
Propane or Natural gas

- Optional forced air heat requires a 120 v 15 amp switched power

- Optional electronic Ignition requires 120v switched power

- Optional LED Lighting requires 120v switched power or Battery pack

UNLESS OTHERWISE SPECIFIED: DIMENSIONS ARE IN INCHES TOLERANCES: FRACTIONAL ± 1/32 ANGULAR: MACH ± .5° BEND ±1° TWO PLACE DECIMAL ± .05 THREE PLACE DECIMAL ±.010	**PROPRIETARY AND CONFIDENTIAL** THE INFORMATION CONTAINED IN THIS DRAWING IS THE SOLE PROPERTY OF **DCI LLC**. ANY REPRODUCTION IN PART OR AS A WHOLEWITHOUT THE WRITTEN PERMISSION OF **DCI LLC** ISPROHIBITED.	COOKE CONTEMPORARY FURNITURE info@cookefurniture.com 888-303-2453 TITLE: Montecito Fire Pit Table 48x84x17
INTERPRET GEOMETRIC TOLERANCING PER: ANSI	COMMENTS:	
MATERIAL 304 SS		SIZE A / DWG. NO. Montecito table / REV A
FINISH TBD		
DO NOT SCALE DRAWING		SCALE: 1:16 / WEIGHT: / SHEET 1 OF 1

5 4 3 2 1